instructions

Kit 1023

NISSAN Bluebird, 4-dr Sedan, 96-01
NISSAN Primera (P11), 4-dr Sedan, 97-01
NISSAN Primera (P11), 5-dr Hatchback, 97-01
NISSAN Sunny, 4-dr Sedan, 99-07

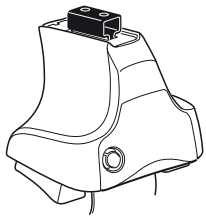

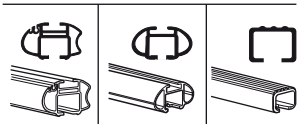

480R
754

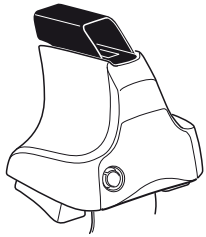

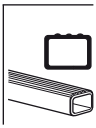

480

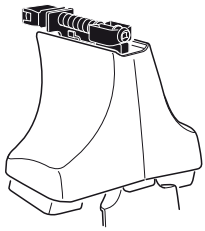

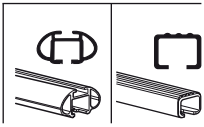

750

ISO 11154-E

THULE® SWEDEN

c.20090415. 503-1023

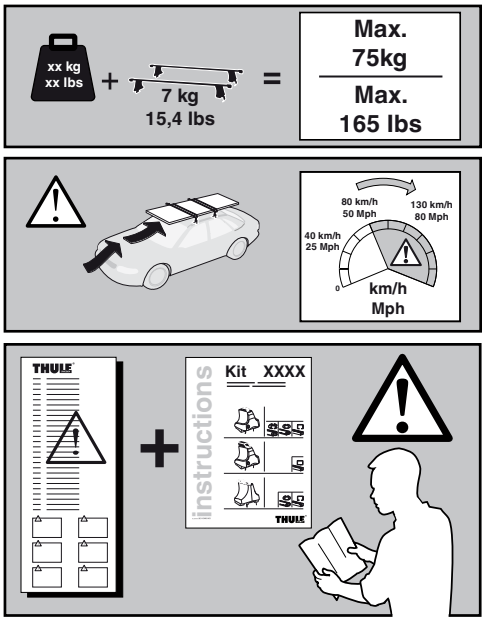
xx kg
xx lbs
7 kg
15,4 lbs
Max.
75kg
Max.
165 lbs
80 km/h
50 Mph
130 km/h
80 Mph
40 km/h
25 Mph
km/h
Mph
THULE
instructions
Kit XXXX
THULE

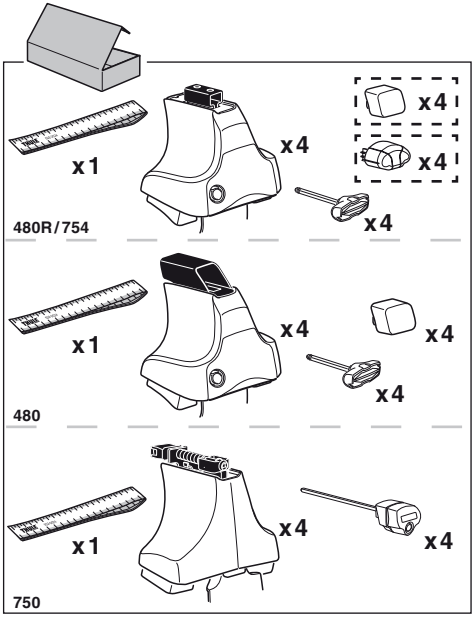
x1
x4
x4
x4
x4
480R/754
x1
x4
x4
x4
480
x1
x4
x4
750

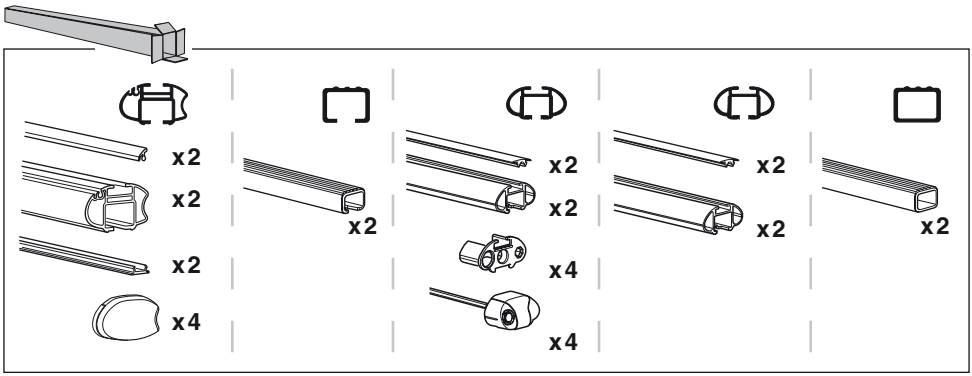
x2
x2
x2
x4
x2
x2
x2
x4
x4
x2
x2
x2
x2

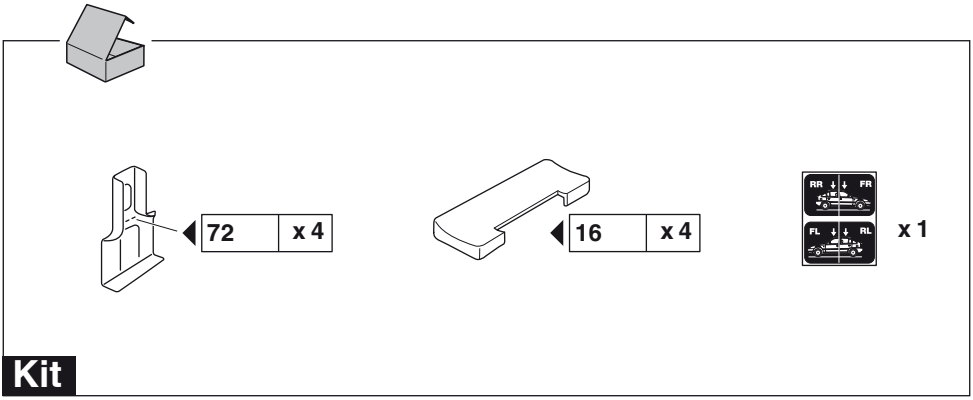
72
x 4
16
x 4
RR
FR
FL
RL
x 1

Kit

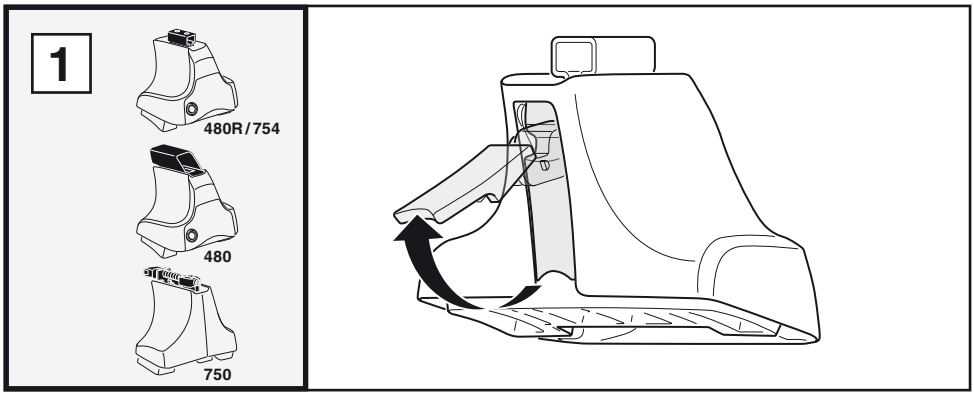
1
480R / 754
480
750

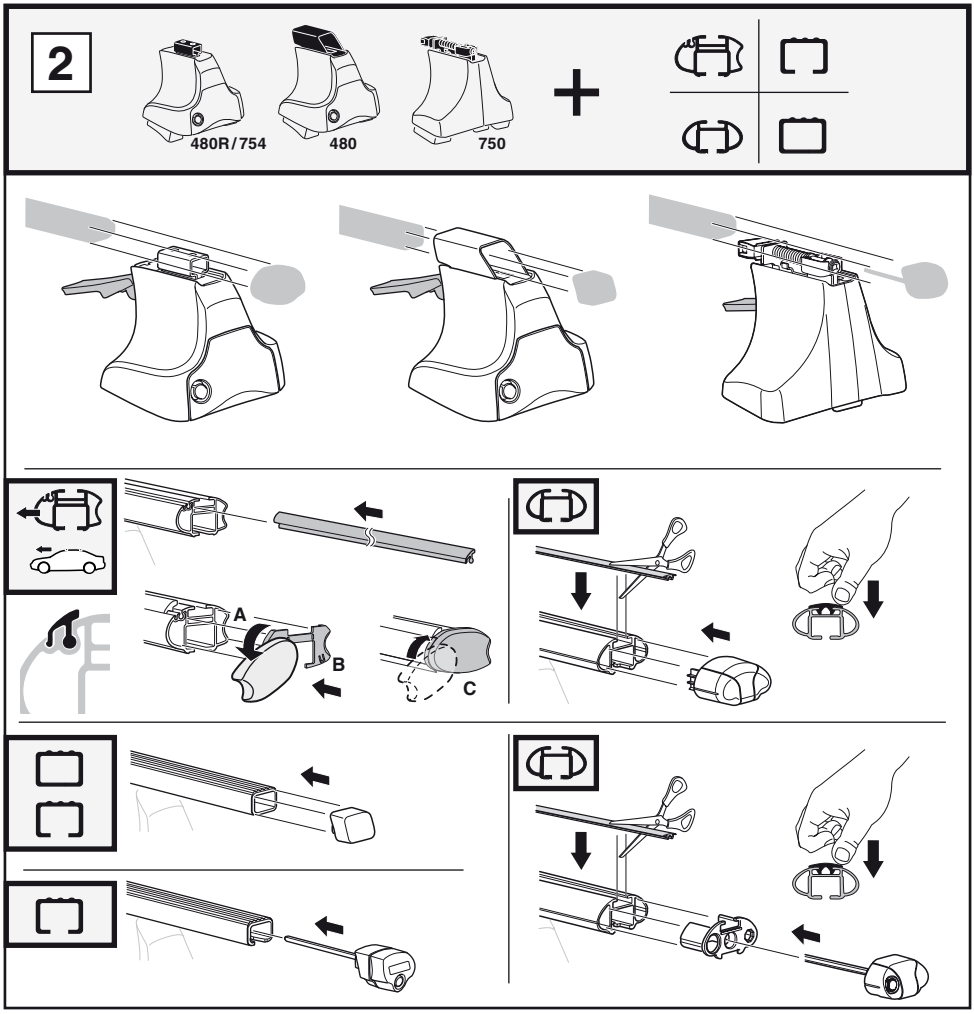
2
480R / 754
480
750
A
B
C

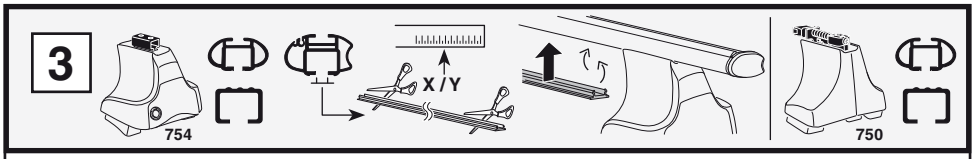

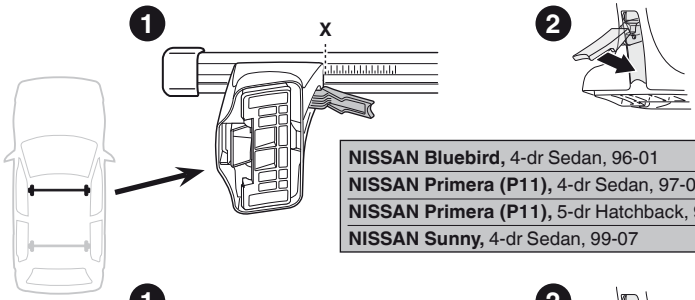

	X
NISSAN Bluebird, 4-dr Sedan, 96-01	**26**
NISSAN Primera (P11), 4-dr Sedan, 97-01	**26,5**
NISSAN Primera (P11), 5-dr Hatchback, 97-01	**26,5**
NISSAN Sunny, 4-dr Sedan, 99-07	**21**

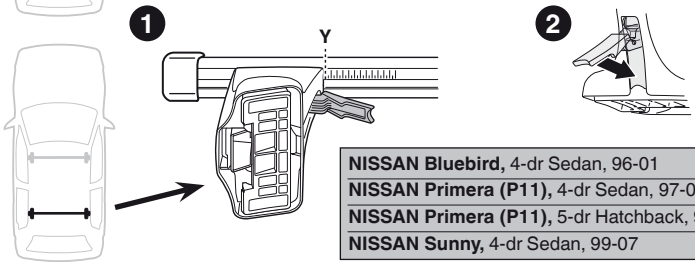

	Y
NISSAN Bluebird, 4-dr Sedan, 96-01	**24**
NISSAN Primera (P11), 4-dr Sedan, 97-01	**23,5**
NISSAN Primera (P11), 5-dr Hatchback, 97-01	**23,5**
NISSAN Sunny, 4-dr Sedan, 99-07	**17**

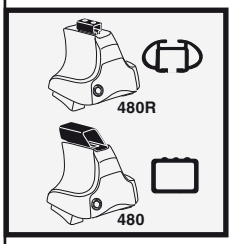

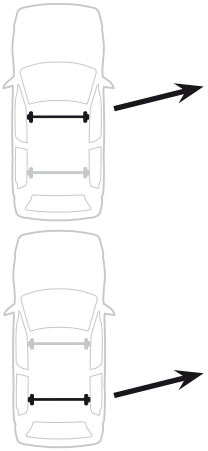

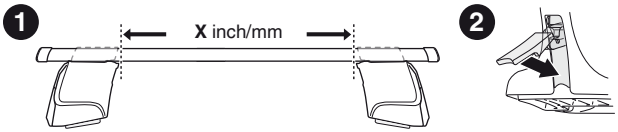

	X inch	X mm
NISSAN Bluebird, 4-dr Sedan, 96-01	**35 7/8”**	**911** mm
NISSAN Primera (P11), 4-dr Sedan, 97-01	**36 1/8”**	**916** mm
NISSAN Primera (P11), 5-dr Hatchback, 97-01	**36 1/8”**	**916** mm
NISSAN Sunny, 4-dr Sedan, 99-07	**33 7/8”**	**861** mm

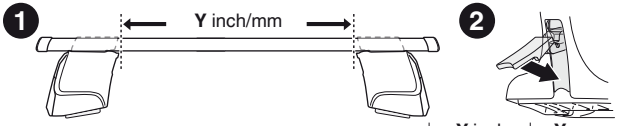

	Y inch	Y mm
NISSAN Bluebird, 4-dr Sedan, 96-01	**35 1/8”**	**891** mm
NISSAN Primera (P11), 4-dr Sedan, 97-01	**34 7/8”**	**886** mm
NISSAN Primera (P11), 5-dr Hatchback, 97-01	**34 7/8”**	**886** mm
NISSAN Sunny, 4-dr Sedan, 99-07	**32 3/8”**	**821** mm

4

NISSAN Bluebird, 4-dr Sedan, 96-01
NISSAN Primera (P11), 4-dr Sedan, 97-01
NISSAN Primera (P11), 5-dr Hatchback, 97-01
NISSAN Sunny, 4-dr Sedan, 99-07

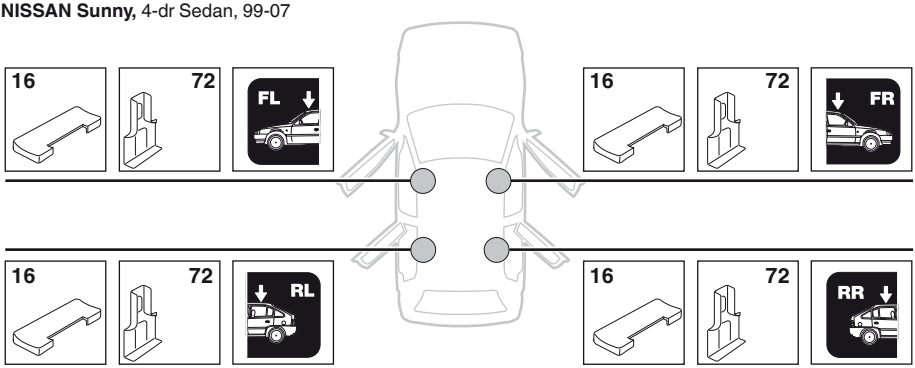

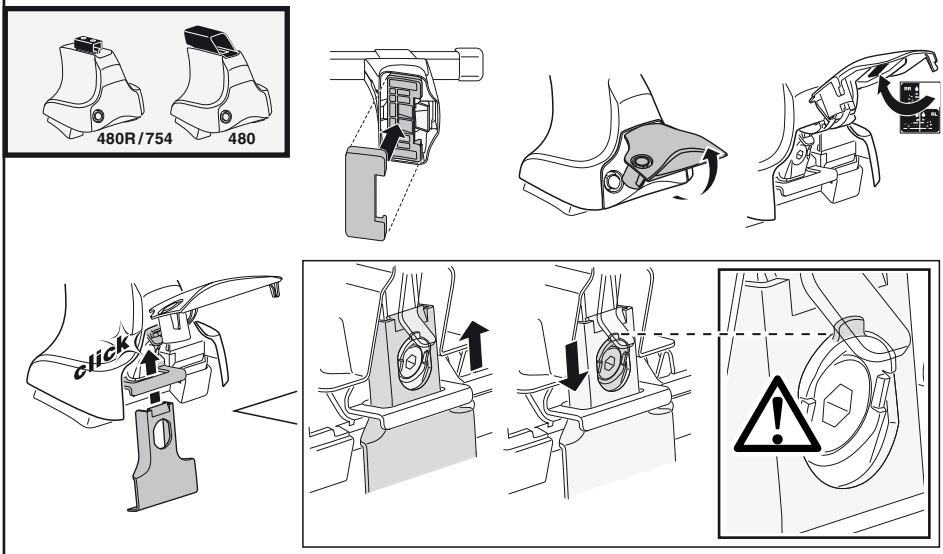

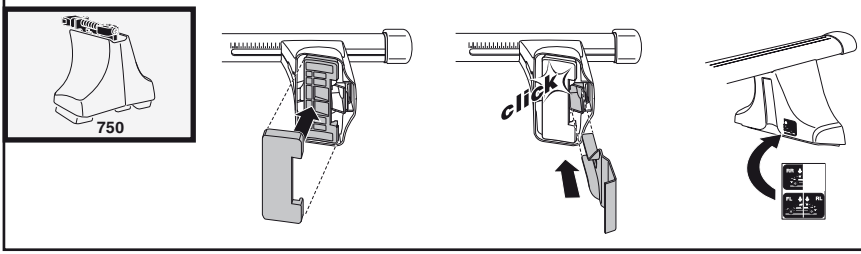

5

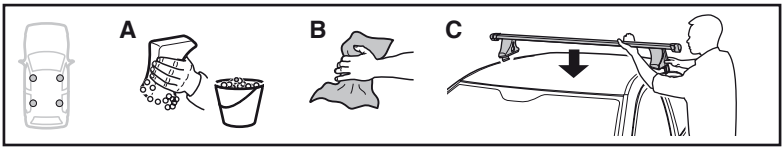

	X mm	Y mm	X inch	Y inch
NISSAN Bluebird, 4-dr Sedan, 96-01	**200** mm	**700** mm	**7 7/8 ”**	**27 1/2 ”**
NISSAN Primera (P11), 4-dr Sedan, 97-01	**150** mm	**700** mm	**5 7/8 ”**	**27 1/2 ”**
NISSAN Primera (P11), 5-dr Hatchback, 97-01	**150** mm	**700** mm	**5 7/8 ”**	**27 1/2 ”**
NISSAN Sunny, 4-dr Sedan, 99-07	**170** mm	**610** mm	**6 3/4 ”**	**24 ”**

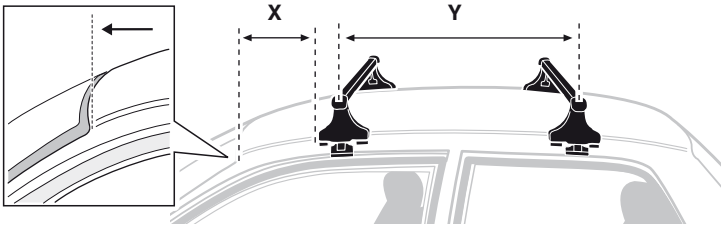

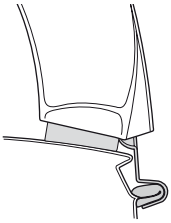

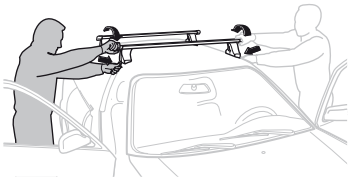

GB/US Tighten alternately
D Die Schrauben abwechselnd anziehen
F Serrer alternativement chaque côté
NL Afwisselend aan de linker- en de rechterkant aandraaien
I Alternare il serraggio delle viti
E Serrare alternativamente
PT Aperte alternadamente
S Dra åt växelvis
FIN Kierrä vuorotellen
EST Pinguldage vaheldumisi
LAT Pievelciet pamīšus
LIT Užsukinėkite pakaitomis
PL Śruby dokręcaj naprzemiennie
RU Затягивайте попеременно
CZ Pokrętła bagażnika dokręcaj dokręcaj naprzemiennie.
SK Doťahujte striedavo
SLO Privijajte izmenično.
HR Naizmjenično zategnite
HU Egymástól függetlenül szorítandó
GR Σφίγγετε εναλάξ
TR Dönüşümlü sıkın
中文 交替拧紧
한국어 번갈아 가며 조이십시오.
日本語 交互に締め付けてください。
ไทย ขันในแบบสลับ

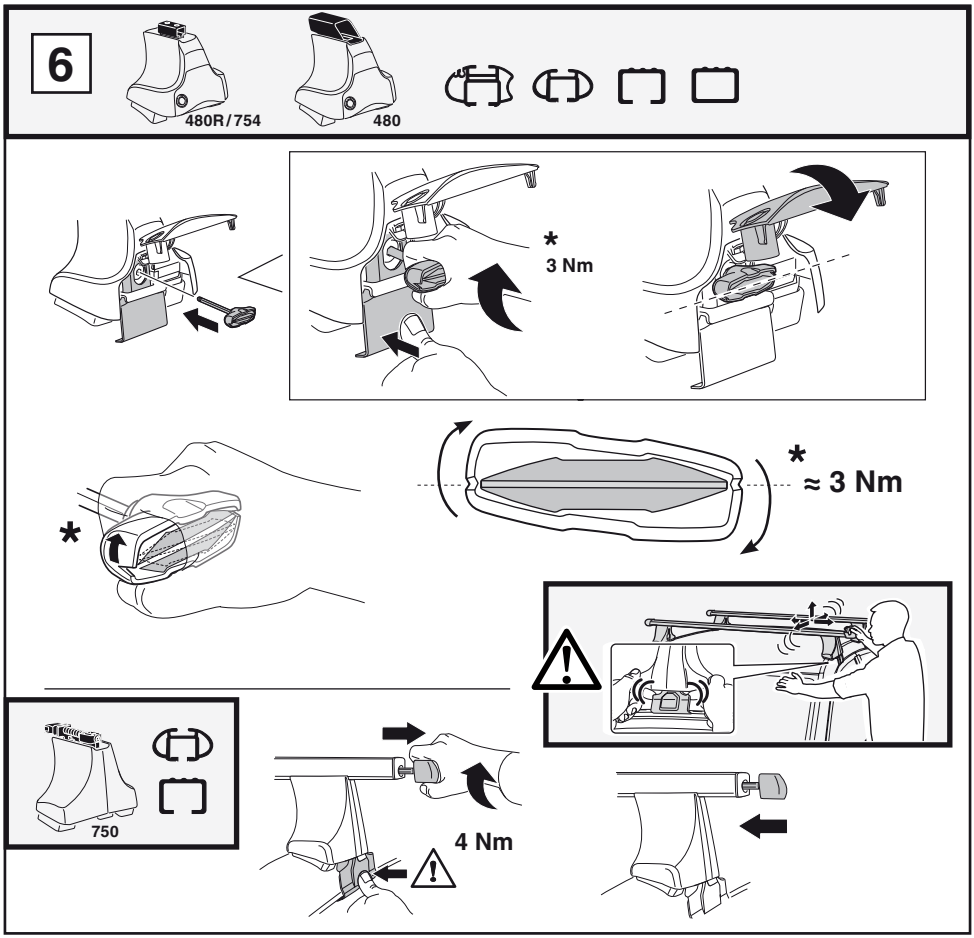
6
480R/754
480
*
3 Nm
*
*
≈ 3 Nm
750
4 Nm

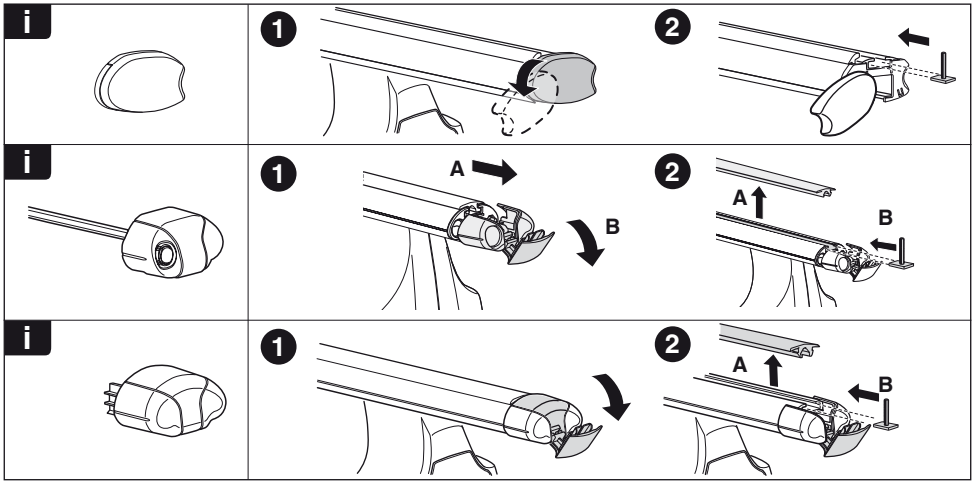
i
1
2
i
1
A
B
2
A
B
i
1
2
A
B

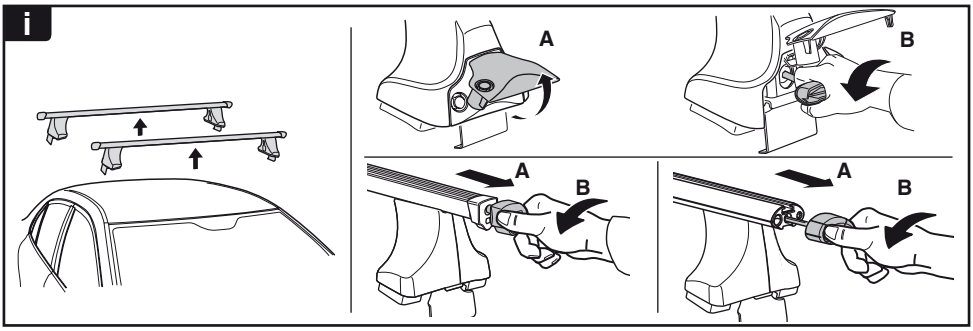

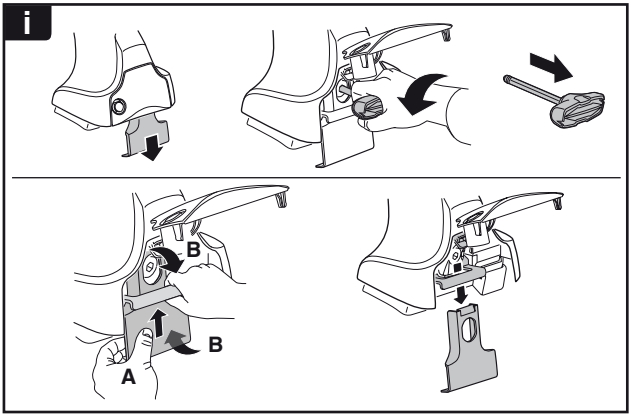

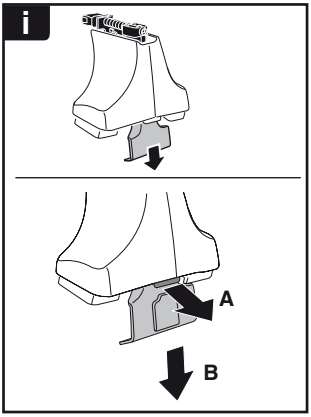

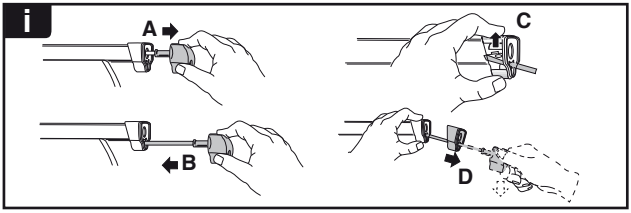

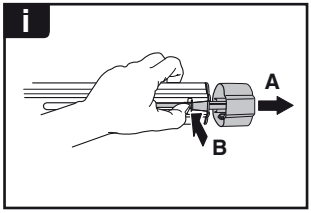

THULE SWEDEN

ONE KEY SYSTEM

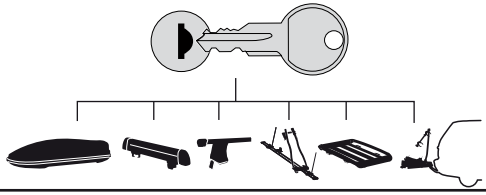

	544	(x4)
	596	(x6)
	588	(x8)
NA	510	(x10)
EUR ASIA	452	(x12)

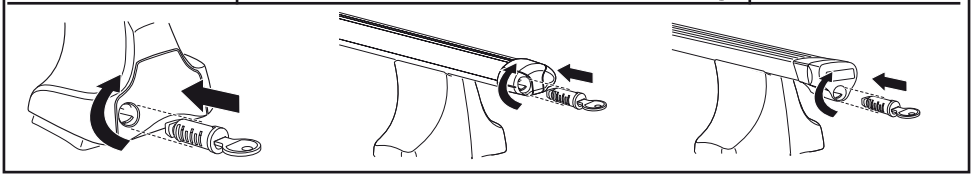

WW Thule Sweden AB, Box 69, 330 33 Hillerstorp, SWEDEN
NA Thule Inc., 42 Silvermine Road, Seymour, Connecticut 06483, USA
info@thule.com
customer.service@thule.com
www.thule.com